PTFE Wiper - 791

Wipers

SP-55-791 (Metric Size)

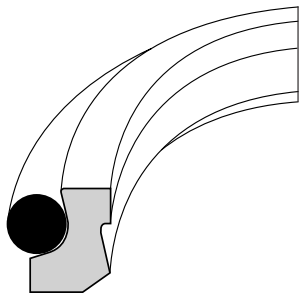

SP-55-791

Material	Temp. (°c)	Speed (m/s)
PTFE - O Ring	-40 +200	15

- Outstanding sliding properties.
- Stick-slip free.
- Space saving construction.
- Very good scraping effect against outside contaminant.

Installation Recommendation

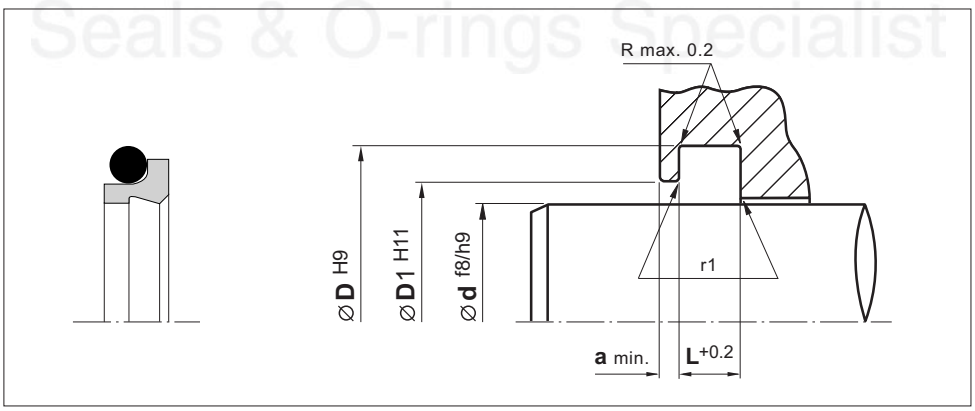

Surface roughness	Ra	Rt
Sliding surface	≤ 0.3 µm	≤ 4 µm
Surface of housing	≤ 1.8 µm	≤ 10 µm
Sides of housing	≤ 3.0 µm	≤ 16 µm

* สอบถามรายละเอียดเพิ่มเติม ติดต่อที่ โทร. 02-8810555 *

Installation Dimensions

Series No.	Rod Dia. d		Groove Dia.	Groove Width	Bore Dia.	Step Width	O-Ring Cross-Section
	Recommended Range	Extended Range	D	L	D1	a	
0	19 - 39.9	19 - 100.0	d + 7.6	4.2	d + 1.5	3.0	2.62
1	40 - 69.9	30 - 200.0	d + 8.8	6.3	d + 1.5	3.0	2.62
2	70 - 139.9	70 - 350.0	d + 12.2	8.1	d + 2.0	4.0	3.53
3	140 - 399.9	100 - 650.0	d + 16.0	9.5	d + 2.5	5.0	5.33
4	400 - 649.9	200 - 650.0	d + 24.0	14.0	d + 2.5	8.0	7.00
5	650 - 999.9	400 - 999.9	d + 27.3	16.0	d + 2.5	10.0	8.40
5X	> 1000		d + 27.3	16.0	d + 2.5	10.0	8.40

(Metric Size)

Rod Dia.	Groove Dia.	Groove Width	Bore Dia.	O-RING No.	Reference (For order processing)	Reference	Reference
d	D	L	D1				
20.0	27.6	4.2	21.5	118	SP-55-791-0200	ES56150-0200	WE5000200
22.0	29.6	4.2	23.5	120	SP-55-791-0220	ES56150-0220	WE5000220
24.0	31.6	4.2	25.5	121	SP-55-791-0240	ES56150-0240	WE5000240
25.0	32.6	4.2	26.5	122	SP-55-791-0250	ES56150-0250	WE5000250
28.0	35.6	4.2	29.5	123	SP-55-791-0280	ES56150-0280	WE5000280
30.0	37.6	4.2	31.5	125	SP-55-791-0300	ES56150-0300	WE5000300
32.0	39.6	4.2	33.5	126	SP-55-791-0320	ES56150-0320	WE5000320
35.0	42.6	4.2	36.5	128	SP-55-791-0350	ES56150-0350	WE5000350
36.0	43.6	4.2	37.5	129	SP-55-791-0360	ES56150-0360	WE5000360
38.0	45.6	4.2	39.5	130	SP-55-791-0380	ES56150-0380	WE5000380
40.0	48.8	6.3	41.5	132	SP-55-791-0400	ES56151-0400	WE5100400
42.0	50.8	6.3	43.5	133	SP-55-791-0420	ES56151-0420	WE5100420
45.0	53.8	6.3	46.5	135	SP-55-791-0450	ES56151-0450	WE5100450
48.0	56.8	6.3	49.5	137	SP-55-791-0480	ES56151-0480	WE5100480
50.0	58.8	6.3	51.5	138	SP-55-791-0500	ES56151-0500	WE5100500
52.0	60.8	6.3	53.5	139	SP-55-791-0520	ES56151-0520	WE5100520
55.0	63.8	6.3	56.5	141	SP-55-791-0550	ES56151-0550	WE5100550
56.0	64.8	6.3	57.5	142	SP-55-791-0560	ES56151-0560	WE5100560
58.0	66.8	6.3	59.5	143	SP-55-791-0580	ES56151-0580	WE5100580
60.0	68.8	6.3	61.5	144	SP-55-791-0600	ES56151-0600	WE5100600
63.0	71.8	6.3	64.5	146	SP-55-791-0630	ES56151-0630	WE5100630
65.0	73.8	6.3	66.5	147	SP-55-791-0650	ES56151-0650	WE5100650
70.0	82.2	8.1	72.0	234	SP-55-791-0700	ES56152-0700	WE5200700
75.0	87.2	8.1	77.0	235	SP-55-791-0750	ES56152-0750	WE5200750
80.0	92.2	8.1	82.0	237	SP-55-791-0800	ES56152-0800	WE5200800

SPEC SEAL Seals & O-rings Specialist

PTFE Wiper - 791

(Metric Size)

Rod Dia. d	Groove Dia. D	Groove Width L	Bore Dia. D1	O-RING No.	Reference (For order processing)	Reference	Reference
85.0	97.2	8.1	87.0	239	SP-55-791-0850	ES56152-0850	WE5200850
90.0	102.2	8.1	92.0	240	SP-55-791-0900	ES56152-0900	WE5200900
95.0	107.2	8.1	97.0	242	SP-55-791-0950	ES56152-0950	WE5200950
100.0	112.2	8.1	102.0	243	SP-55-791-1000	ES56152-1000	WE5201000
105.0	117.2	8.1	107.0	245	SP-55-791-1050	ES56152-1050	WE5201050
110.0	122.2	8.1	112.0	246	SP-55-791-1100	ES56152-1100	WE5201100
115.0	127.2	8.1	117.0	248	SP-55-791-1150	ES56152-1150	WE5201150
120.0	132.2	8.1	122.0	249	SP-55-791-1200	ES56152-1200	WE5201200
125.0	137.2	8.1	127.0	251	SP-55-791-1250	ES56152-1250	WE5201250
130.0	142.2	8.1	132.0	253	SP-55-791-1300	ES56152-1300	WE5201300
135.0	147.2	8.1	137.0	254	SP-55-791-1350	ES56152-1350	WE5201350
140.0	156.0	9.5	142.5	359	SP-55-791-1400	ES56153-1400	WE5301400
145.0	161.0	9.5	147.5	360	SP-55-791-1450	ES56153-1450	WE5301450
150.0	166.0	9.5	152.5	361	SP-55-791-1500	ES56153-1500	WE5301500
155.0	171.0	9.5	157.5	362	SP-55-791-1550	ES56153-1550	WE5301550
160.0	176.0	9.5	162.5	363	SP-55-791-1600	ES56153-1600	WE5301600
170.0	186.0	9.5	172.5	365	SP-55-791-1700	ES56153-1700	WE5301700
180.0	196.0	9.5	182.5	366	SP-55-791-1800	ES56153-1800	WE5301800
190.0	206.0	9.5	192.5	368	SP-55-791-1900	ES56153-1900	WE5301900
200.0	216.0	9.5	202.5	369	SP-55-791-2000	ES56153-2000	WE5302000
210.0	226.0	9.5	212.5	371	SP-55-791-2100	ES56153-2100	WE5302100
220.0	236.0	9.5	222.5	373	SP-55-791-2200	ES56153-2200	WE5302200
225.0	241.0	9.5	227.5	373	SP-55-791-2250	ES56153-2250	WE5302250
230.0	246.0	9.5	232.5	374	SP-55-791-2300	ES56153-2300	WE5302300
240.0	256.0	9.5	242.5	376	SP-55-791-2400	ES56153-2400	WE5302400
250.0	266.0	9.5	252.5	377	SP-55-791-2500	ES56153-2500	WE5302500
260.0	276.0	9.5	262.5	378	SP-55-791-2600	ES56153-2600	WE5302600
270.0	286.0	9.5	272.5	379	SP-55-791-2700	ES56153-2700	WE5302700
280.0	296.0	9.5	282.5	379	SP-55-791-2800	ES56153-2800	WE5302800
290.0	306.0	9.5	292.5	380	SP-55-791-2900	ES56153-2900	WE5302900
300.0	316.0	9.5	302.5	381	SP-55-791-3000	ES56153-3000	WE5303000
310.0	326.0	9.5	312.5	381	SP-55-791-3100	ES56153-3100	WE5303100
320.0	336.0	9.5	322.5	382	SP-55-791-3200	ES56153-3200	WE5303200
330.0	346.0	9.5	332.5	382	SP-55-791-3300	ES56153-3300	WE5303300
340.0	356.0	9.5	342.5	382	SP-55-791-3400	ES56153-3400	WE5303400
350.0	366.0	9.5	352.5	383	SP-55-791-3500	ES56153-3500	WE5303500
360.0	376.0	9.5	362.5	383	SP-55-791-3600	ES56153-3600	WE5303600
370.0	386.0	9.5	372.5	384	SP-55-791-3700	ES56153-3700	WE5303700
380.0	396.0	9.5	382.5	384	SP-55-791-3800	ES56153-3800	WE5303800
390.0	406.0	9.5	392.5	384	SP-55-791-3900	ES56153-3900	WE5303900